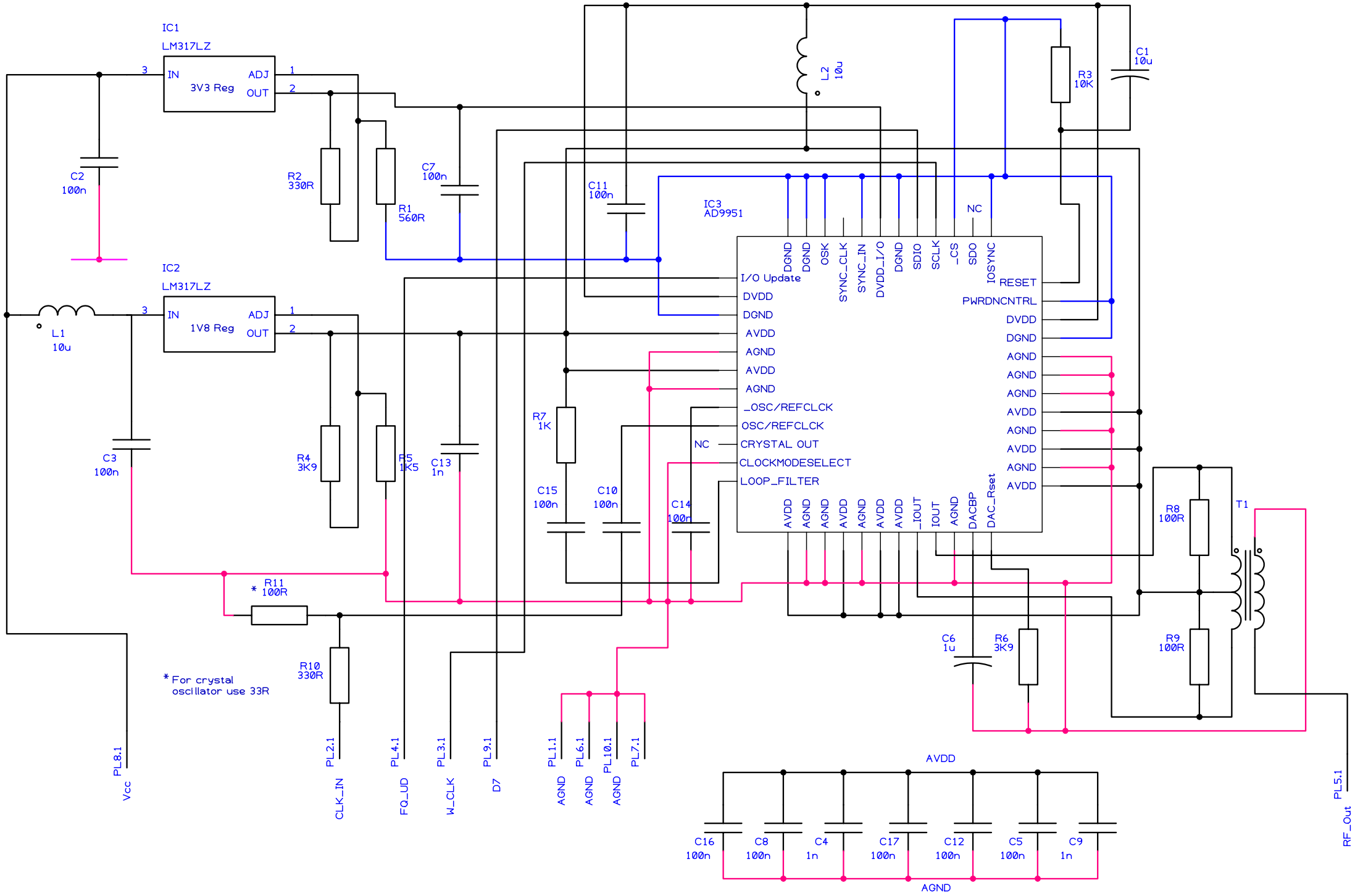
IC1
LM317LZ
IN
3V3 Reg
ADJ
OUT
IC2
LM317LZ
IN
1V8 Reg
ADJ
OUT
IC3
AD9951
I/O Update
DVDD
DGND
AVDD
AGND
AVDD
AGND
_OSC/REFCLCK
OSC/REFCLCK
CRYSTAL OUT
CLOCKMODESELECT
LOOP_FILTER
DGND
DGND
OSK
SYNC_CLK
SYNC_IN
DVDD_I/O
DGND
SDIO
SCLK
_CS
SDO
IOSYNC
RESET
PWRDNCNTRL
DVDD
DGND
AGND
AGND
AGND
AVDD
AGND
AVDD
AGND
AVDD
AVDD
AGND
AGND
AVDD
AVDD
_IOUT
IOUT
AGND
DACBP
DAC_Rset
NC
NC
L1
10u
L2
10u
C1
10u
C2
100n
C3
100n
C7
100n
C11
100n
R1
560R
R2
330R
R3
10K
R4
3K9
R5
1K5
C13
1n
R7
1K
C15
100n
C10
100n
C14
100n
R8
100R
R9
100R
T1
C6
1u
R6
3K9
R11
* 100R
R10
330R
* For crystal
oscillator use 33R
PL8.1
Vcc
PL2.1
CLK_IN
PL4.1
FQ_UD
PL3.1
W_CLK
PL9.1
D7
PL1.1
AGND
PL6.1
AGND
PL10.1
AGND
PL7.1
AVDD
C16
100n
C8
100n
C4
1n
C17
100n
C12
100n
C5
100n
C9
1n
AGND
PL5.1
RF_Out